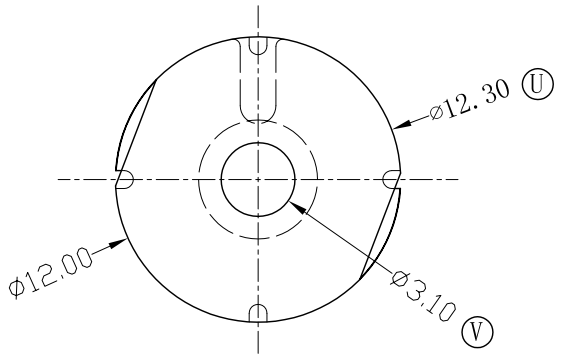

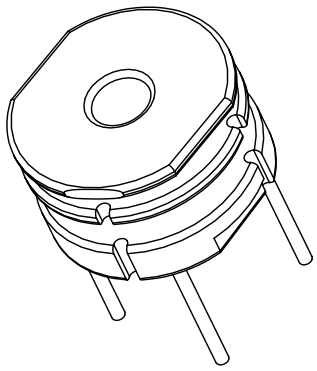

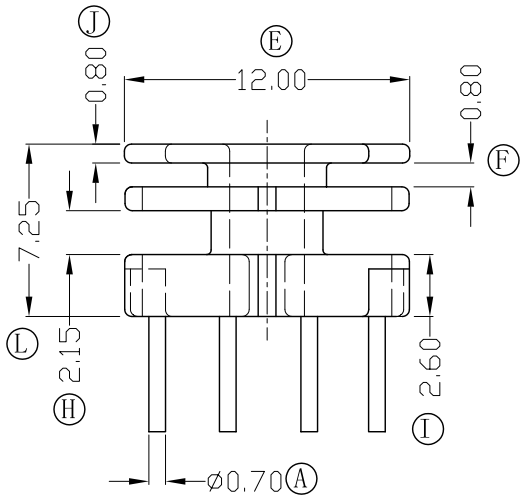

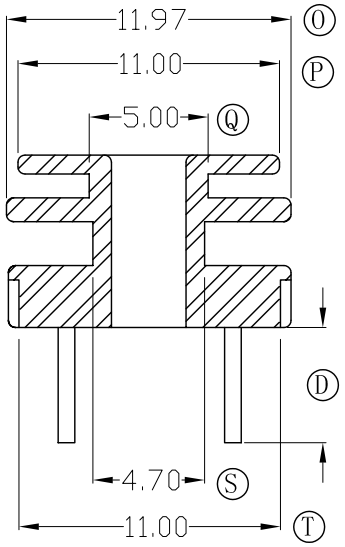

A-A

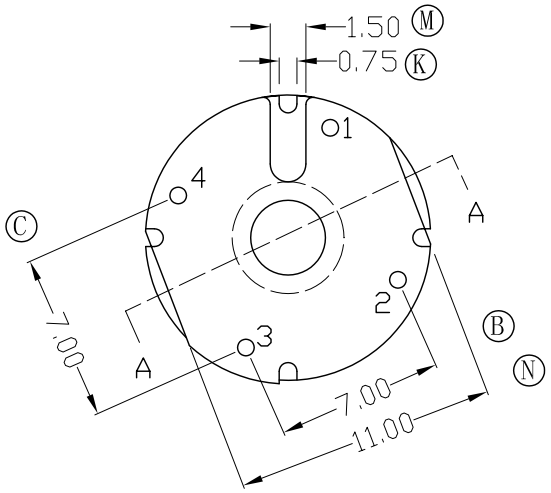

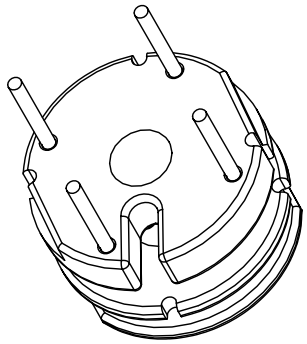

REV.	REVISIONS REC.	DATE:	REV.	REVISIONS REC.	DATE:
0			2	F 0.85->0.80, H 2.00->2.15	050603
1	四PIN为四角对称PIN位	04.02.25	3	U ⌀12.00->⌀12.30	

DRAWN & DRAFTED BY	ZHU BAO	TOLERANCES: 0<L≤4 ±0.1; 4<L≤16 ±0.2; 16<L≤63 ±0.3; pin pitch ±0.2	ANGLE: ±1°	TITLE: 7.85 BOBBIN(4P)	
CHECKED & APPROVED BY	FEI LIAO		UNIT: MM	BOBBIN MATERIAL: PHENOLIC	UL REC. UL 94V-0
富翔塑胶电子有限公司 FUXIANG PLASTICS ELECTRONICS CO.,LTD. TEL:086-0769-86332728~9 FAX:086-0769-86309536			SCALE:	PIN MATERIAL: CP WIRE	PIN TENSION LOAD: 1.2kg MIN.
				DATE: OCT 24 2003	DRAWING NO. FX-7.85-1 / REV. 3